C-more 4” Micro-Graphic Panel Accessories

D-SUB 15-pin 90-degree Communication Port Adapter

The EA-ADPTR-4 adapter plugs into the 15-pin serial port on the rear of a 4″ panel to allow a controller communication cable to be plugged in at a 90 degree angle to reduce panel depth requirements. 15-pin straight through pin-out. UL Recognized.

Part No.
EA-ADPTR-4

<--->

Dimensions

Units: inches [mm]

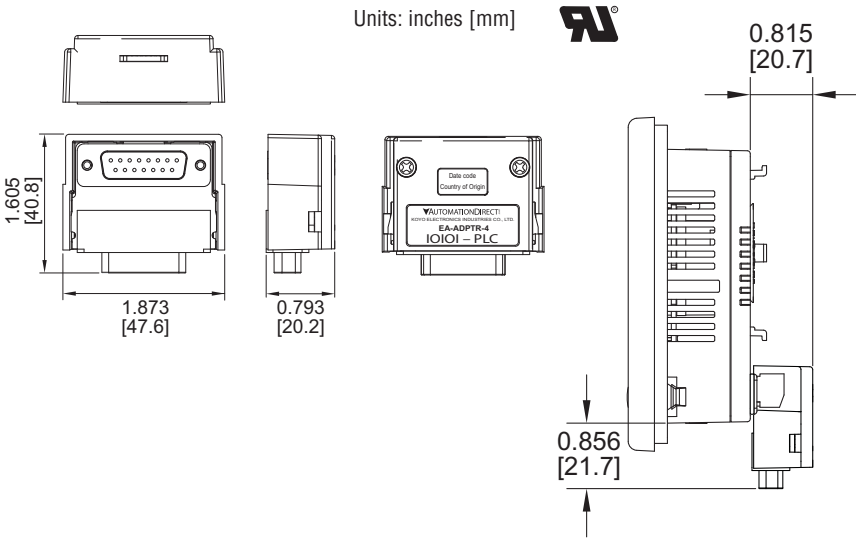

D-SUB 15-pin to Terminal Block Adapter

The EA-COMCON-3 adapter plugs into the 15-pin serial port on the rear of a 4″ panel to allow wire terminal connections for an RS-422/RS-485/DH-485 PLC communication cable. UL Recognized.

Part No.
EA-COMCON-3

<--->

Dimensions

Units: inches [mm]

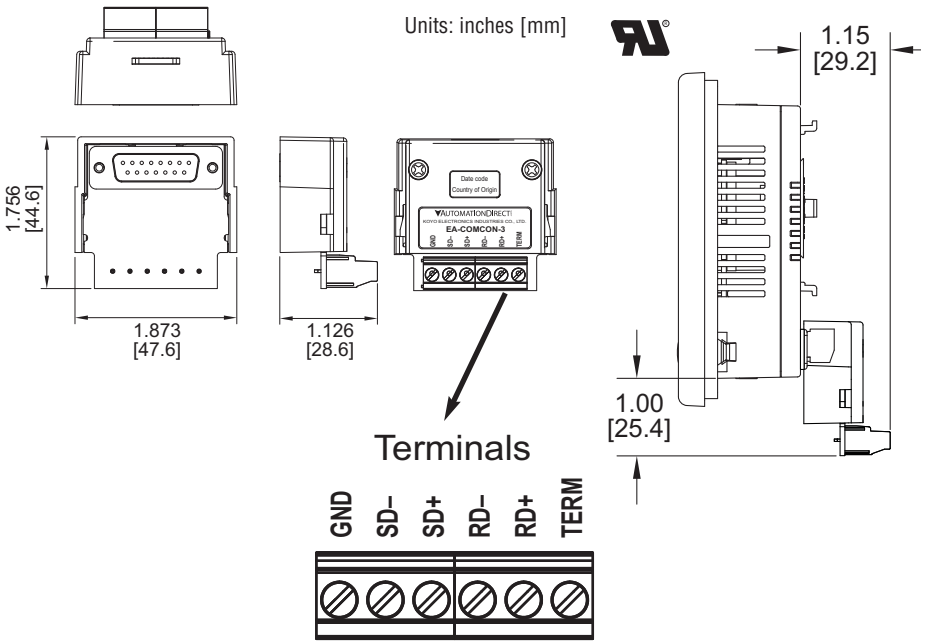

C-more 4" Micro-Graphic Panel Accessories

Clear Screen Overlay

Optional clear screen overlay used to protect *C-more* 4" Micro-Graphic displays from minor scratches and wear. Package contains 3 clear screen overlays.

Part No. EA-4-COV2

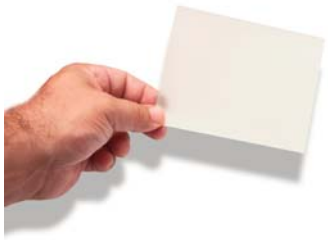

<--->

Dimensions

Units: inches [mm]

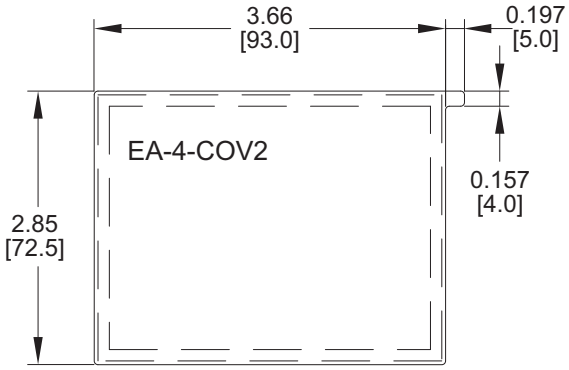

Clear Screen Overlay Installation

Step 1

Remove the overlay from the package

Step 2

Remove the paper backing from the overlay

Step 3

Align the overlay with the screen and press the adhesive firmly into place

Step 4

Remove the protective film*

***Note: The overlay cover ships with a thin protective film on the face that should be carefully removed after installation.**

C-more 4” Micro-Graphic Replacement Parts

The optional replacement parts can be used to replace damaged, worn or lost *C-more* 4″ Micro-Graphic panel components.

Replacement parts at a glance:

Part Number	Description	Price
EA-MG-BZ2-BRK	Replacement mounting bracket for 4” and 6” ***C-more*** Micro-Graphic panels and 6” keypad bezels. Also used to mount the ***C-more*** 3” Micro-Graphic bezel EA-MG-BZ2. (pk of 8)	<--->
EA-MG-DC-CON	Replacement adapter DC power connector (pk of 5)	<--->
EA-MG4-GSK	Replacement mounting gasket for ***C-more*** 4” Micro-Graphic panels	<--->
EA-MG4-FKL	Replacement function key label insert for ***C-more*** 4” Micro-Graphic panels (pk of 4; 3 blank, 1 F1-F5 for landscape)	<--->

Panel Mounting Clips
Part No. EA-MG-BZ2-BRK

(pk of 8)

DC Power Connector
Part No. EA-MG-DC-CON

(pk of 5)

Panel Gasket
Part No. EA-MG4-GSK

Function Keys Label Inserts
Part No. EA-MG4-FKL

(pk of 4; 3 blank, 1 F1-F5 for landscape)